selex TH S
Servo Pump System Machine

Injection Unit

		TH 80S				TH 110S				TH 130S			
Screw & Cylinder Type		O	A	B	C	O	A	B	C	O	A	B	C
Screw Diameter	mm	25	28	32	36	25	28	32	36	36	40	45	50
Injection Pressure	kg/cm²	3388	2701	2068	1634	3388	2701	2068	1634	2839	2300	1817	1472
	Mpa	332	265	203	160	332	265	203	160	278	226	178	144
Theoretical Injection Volume	cm³	64	80	105	132	64	80	105	132	183	226	286	353
Shot Weight (PS)	g	58	73	95	120	58	73	95	120	167	206	261	322
Screw Stroke	mm	130	130	130	130	130	130	130	130	180	180	180	180
Injection Speed	mm/s	136	136	136	136	136	136	136	136	127	127	127	127
Injection Rate	cm³/s	67	84	109	139	67	84	109	139	130	160	202	250
Plasticizing Capacity	kg/h	38	52	74	101	38	52	74	101	79	105	143	190
Screw Revolution	rpm	370	370	370	370	370	370	370	370	290	290	290	290

Clamping Unit

		TH 80S	TH 110S	TH 130S
Clamping Force	ton(kN)	80(785)	110(1079)	130(1275)
Distance Between Tie-Bar (H x V)	mm	410 x 410	410 x 410	460 x 460
Platen Size (H x V)	mm	630 x 630	630 x 630	690 x 690
Opening Stroke	mm	350	350	400
Daylight	mm	700	750	850
Min. Mold Height	mm	140	150	180
Max. Mold Height	mm	350	400	450
Ejector Force	ton(kN)	3.4(34)	3.4(34)	4.2(41)
Ejector Stroke	mm	100	100	120

General

		TH 80S				TH 110S				TH 130S			
Total Heat Capacity	kW	8.0	9.0	8.5	9.0	8.0	9.0	8.5	9.0	10.0	10.5	12.5	14.0
Electric Motor Power Capacity	kW	11.0				11.0				15.0			
Total Electric Power Capacity	kW	19.0	20.0	19.5	20.0	19.0	20.0	19.5	20.0	25.0	25.5	27.5	29.0
Total Oil Reservoir Capacity	ℓ	300				300				330			
Machine Weight	ton	4.5				4.5				5.6			
Machine Dimension (L x W x H)	m	5.1 x 1.4 x 1.7				5.1 x 1.4 x 1.7				5.5 x 1.5 x 1.8			
Cooling Water Required	ℓ /min	40				40				40			

1. Theoretical Injection Volume : Screw Dia x Screw Stroke
2. Clamping method is double toggle design for all models.
3. Cooling water requirement is not considered for requirement of mold.
4. Specifications can be changed for improved development without prior notice.

Certified ISO 9001 : 2000 CE Mark KCS Mark

TH 170S				TH 220S			TH 280S				TH 350S			TH 350WS			TH 450S		
O	A	B	C	O	A	B	S	O	A	B	O	A	B	O	A	B	O	A	B
36	40	45	50	45	50	55	45	50	55	60	60	65	70	60	65	70	65	70	80
2839	2300	1817	1472	2647	2144	1772	2958	2396	1980	1664	2353	2005	1729	2353	2005	1729	2191	1889	1447
278	226	178	144	260	210	174	290	235	194	163	231	197	170	231	197	170	215	185	142
183	226	286	353	350	432	523	350	432	523	622	735	863	1001	735	863	1001	1062	1231	1608
167	206	261	322	318	393	476	318	393	476	566	669	785	911	669	785	911	966	1121	1464
180	180	180	180	220	220	220	220	220	220	220	260	260	260	260	260	260	320	320	320
127	127	127	127	134	134	134	120	120	120	120	111	111	111	111	111	111	101	101	101
130	160	202	250	214	264	319	191	236	286	340	313	367	426	313	367	426	336	389	509
79	105	143	190	124	164	211	114	151	194	245	213	264	321	213	264	321	237	288	412
290	290	290	290	250	250	250	230	230	230	230	200	200	200	200	200	200	180	180	180

170(1667)	220(2157)	280(2746)	350(3432)	350(3432)	450(4413)
510 x 510	560 x 560	610 x 610	720 x 720	820 x 820	870 x 820
750 x 750	840 x 840	900 x 900	1060 x 1060	1180 x 1180	1260 x 1210
460	490	540	670	730	730
960	1090	1190	1420	1480	1530
180	200	250	300	300	350
500	600	650	750	750	800
4.2(41)	5.8(57)	5.8(57)	8.8(86)	8.8(86)	12.4(122)
140	150	170	200	200	200

10.0	10.5	12.5	14.0	14.0	15.5	17.0	14.0	15.5	17.0	19.5	24.0	27.0	29.0	24.0	27.0	29.0	25.0	28.0	32.0
15.0				22.0			22.0				30.0			30.0			30.0		
25.0	25.5	27.5	29.0	36.0	37.5	39.0	36.0	37.5	39.0	41.5	54.0	57.0	59.0	54.0	57.0	59.0	55.0	58.0	62.0
330				600			600				800			800			800		
6.2				9.1			12 .0				15.8			16.8			23.0		
5.7 x 1.6 x 1.8				6.5 x 1.8 x 2.1			6.7 x 1.9 x 2.1				8.1 x 2.0 x 2.1			8.3 x 2.0 x 2.2			8.7 x 2.1 x 2.3		
40				65			65				65			65			65		

Machine Dimension

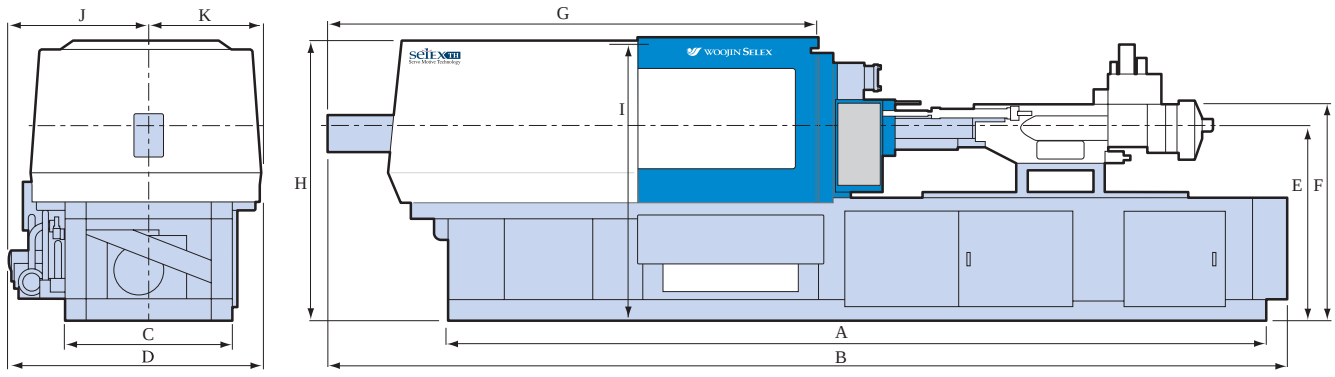

	A	B	C	D	E	F	G	H	I	J	K
TH 80	4235	5040	850	1400	1205	1338	2440	1700	1530	780	670
TH 110	4235	5040	850	1400	1205	1338	2440	1700	1530	780	665
TH 130	4600	5320	915	1600	1235	1383	2525	1750	1590	900	700
TH 170	4750	5660	970	1700	1263	1411	2845	1850	1648	970	730
TH 220	5535	6480	1140	1780	1360	1540	3190	2025	1790	970	810
TH 280	5835	6830	1190	1900	1370	1550	3440	2100	1835	1050	850
TH 350	7000	8100	1340	1950	1415	1625	4120	2100	1970	1075	875
TH 350W	7095	8315	1470	2000	1465	1675	4335	2200	2070	1100	900
TH 450	7400	8700	1600	2100	1495	1650	4635	2300	2115	1150	950

Robot Mounting

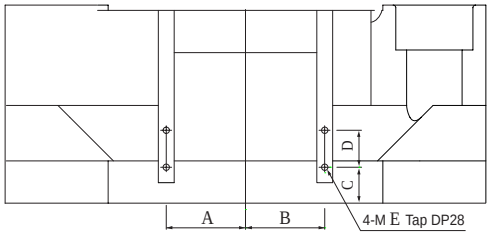

Hopper Mounting

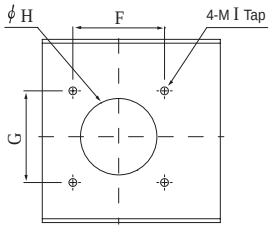

Nozzle Dimension

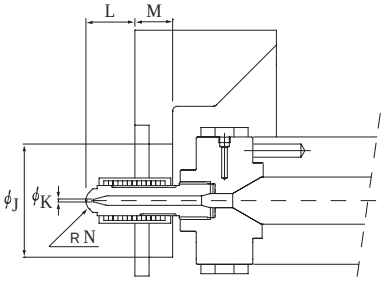

	A	B	C	D	E	F	G	H	I	J	K	L	M	N
TH 80	105	105	47	40	12	100	100	85	8	90	2	50	30	9
TH 110	105	105	47	40	12	100	100	85	8	90	2	50	25	9
TH 130	125	125	62	70	14	120	120	90	12	100	3	50	30	10
TH 170	150	150	62	70	14	120	120	90	12	100	3.5	50	30	10
TH 220	150	150	70	70	14	120	120	100	12	100	3.5	50	40	15
TH 280	150	150	68	70	14	120	120	100	12	120	3.5	50	40	15
TH 350	210	210	67	100	20	127	127	115	12	120	3.5	50	40	15
TH 350W	210	210	67	100	20	127	127	115	12	120	3.5	50	40	15
TH 450	210	210	67	100	20	165	165	68	12	200	6	50	60	19

Certified ISO 9001: 2000 CE Mark KCS Mark

Platen Dimension

80 ton

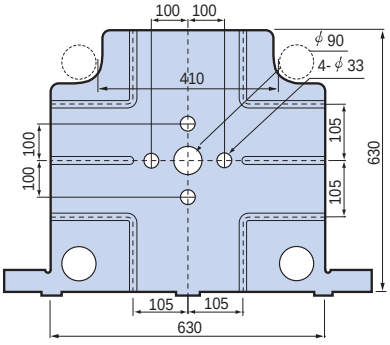

110 ton

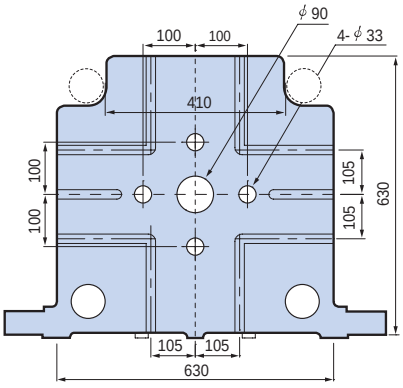

130 ton

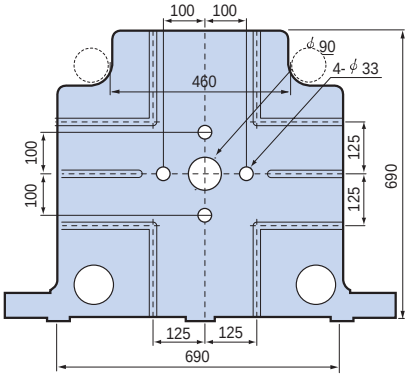

170 ton

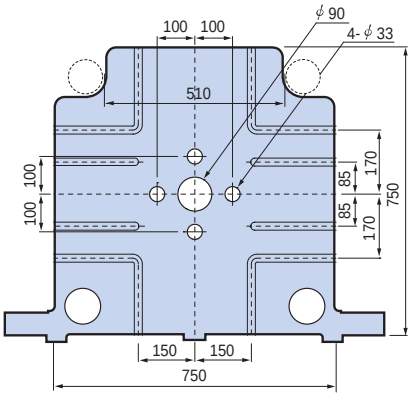

220 ton

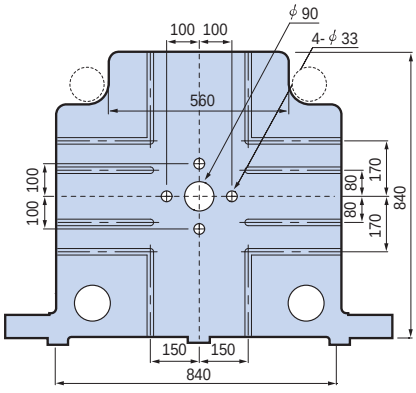

280 ton

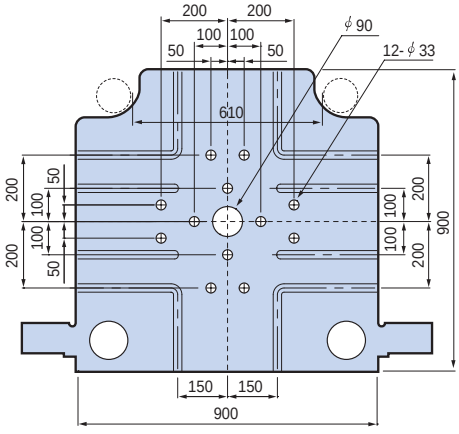

350 ton
350W

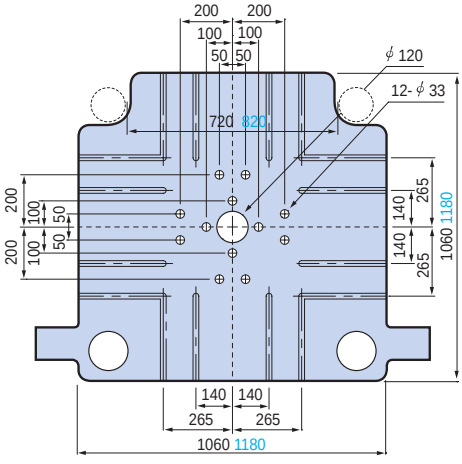

450 ton

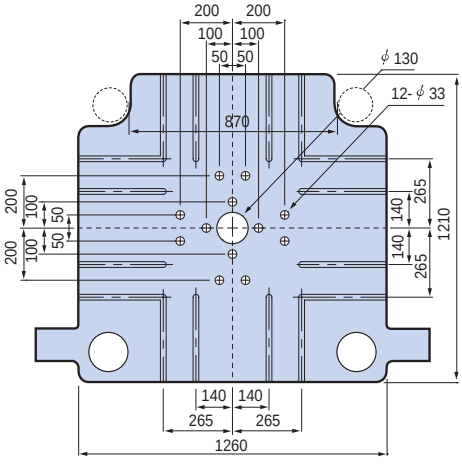

Feature

S : Standard **O** : Optional

Injection Unit	TH-G 80 ~ 450	TH-S 80 ~ 450
1. Injection process control stage (Speed / Pressure)	6	
2. Holding process control stage (Speed / Pressure)	3	
3. Charging process control stage (Speed / Pressure)	4	
4. Back pressure control stage	4	
5. Prevention of resin leakage before charging	S	
6. Prevention of resin leakage after charging	S	
7. Injection speed graphic display	S	
8. Injection pressure graphic display	S	
9. Closed-loop of injection process	O	
10. Cushion amount display & alarm	S	
11. Screw RPM display	S	
12. Auto purging circuit	S	
13. Screw cold start prevention device	S	
14. Heater pre-heating timer (for Weekend)	S	
15. Heater temperature abnormal display & alarm	S	
16. PID heater temperature control	S	
17. Heater temperature “WAIT”mode	S	
18. Mold opening during charging	O	
19. Shut-off nozzle (Hydraulic type)	O	
20. Shut-off nozzle (Spring type)	O	
21. Valve gate (1 Stage)	S	
22. Double-stage-speed control hydraulic motor	O	
23. Anti-wear screw & barrel	S	
24. Anti-wear & corrosion screw & barrel	O	
25. Double barrier mixing screw (SB Screw)	O	

Clamping Unit		
1. Mold open & close speed control stage	5	
2. Mold open & close pressure control stage	5	
3. Ejector speed control stage	2	
4. Ejector pressure control stage	2	
5. Automatic mold height adjustment	S	
6. Hydraulic core puller (1 Stage)	S	
7. Core moving during mold opening or ejecting	O	
8. Unscrewing device	O	
9. Dual Air blow off unit	S	
10. Daylight extension	O	

Generals	TH-G 80 ~ 450	TH-S 80 ~ 450
1. Molding data memory capacity (Internal / External)	1000/USB	
2. Alarm history display & saving	S	
3. Record of setting-value changing	S	
4. Statistical function	S	
5. I/O circuit display	S	
6. Multi language display (English / Chinese / Portuguish / Czech)	S	
7. Robot Interlock circuit	S	
8. Robot Interface circuit (Euromap 12 / SPI)	S	
9. Hydraulic oil level alarm	S	
10. Hydraulic oil temperature over alarm	S	
11. Production quantity control & alarm	S	
12. Hydraulic oil temperature control device	S	
13. Hopper throat temperature control device	S	
14. Auto lubrication device	S	
15. Shot data file saving	X	
16. Molding data print & file saving	X	
17. Hopper swievel & moving device	O	
18. Auto safety door (Open only)	O	
19. Hydraulic oil cleaner	O	
20. Auto clamps (Quick die changer)	O	
21. Insulation plate for mold	O	
22. Product knock-out confirmation device	O	
23. Product good / bad check device	O	
24. Product chute	S	
25. Levelling pads	S	
26. 3 Stage alarm lamp	S	
27. Maintenance tools	S	
28. Spare parts	S	

* Specifications can be changed for improved development without prior notice.